GREEN MACHINES™

720ze



www.greenmachines.com
+389 43 551 100
office@greenmachines.com



WELCOME TO THE WORLD OF GREEN MACHINES

WHERE INNOVATION BEATS IMITATION

Green Machines is among the oldest manufacturers of sweepers, dating back to 1965 and our first headquarters in Scotland. From the very first walk-behind sweepers with their exceptional maneuverability to state-of-the-art battery and hydrogen technology present in our sweepers, Green Machines has created a market which remains unrivaled to date. We currently operate from our offices in North Macedonia, the Netherlands, United Kingdom and USA, while we offer clients all around the world full support through our wide global dealership network. With our ambitious Green Machines vision, we plan to stay ahead of the game by bringing new product technologies to the highly demanding outdoor cleaning market. For many years now, we have aimed to contribute decisively towards cleaner and tidier towns and cities by providing efficient and sophisticated sweeping machines. Our portfolio comprises 8 machines models and each one is unique in its own way. We offer you a wide range of choices by providing cleaning solutions that others have yet to catch up to. All of our machines are compact and swift enough to enable you to clean any urban area around the city with maximum efficiency, without worrying that they will disrupt your citizens. Our machines are purposefully designed in a way that does not impact the normal everyday functioning even of the busiest areas in your city.



OUR MISSION: ZERO EMISSIONS

Green Machines realizes that the earth's environment is under severe stress from uncontrolled human activity, threatening the survival of our society and the performance of Green Machines' mission. We are dedicated to minimizing our own impact and maximizing the effective use of resources. Green Machines strives to develop and produce sustainable sweeping machines combined with excellent performance for a better world. Our vision is often far from the traditional approach but we are proud to take leadership in paving the path to an emissionfree world. Our vision focuses on minimizing global impact through the following guidelines:

- Help our customers reduce their carbon footprint through the use of our eco-frendly products.
- Maximize the "End of Life Environmental Value" of our products.
- Work with suppliers who promote sustainable practices.
- Participate in efforts to further improve sustainable protection and understanding among our staff and end-users across the globe.
- Listen to the voice of the customers.

KEEPS YOUR CITY **CLEAN AND GREEN**



PORTFOLIO

We have over 60 years of manufacturing experience and we are constantly improving our products based on direct customer feedback and the ongoing changes and trends on the market. Our current product portfolio comprises some of the world's most technologically advanced sweepers, and each of our machines is so unique that it is basically impossible to compare them to one another. Every machine is designed in a way that meets specific needs and we are confident that we have a machine that will meet your specific needs.



GM1ze

Fully electric, versatile, waste Vacuum Cleaner. Small manoeuvrable and Compact, ideal for any City Centre.



GM400ze/GM414

One of our latest environmental sweeper innovations, the 400ze is based on the world beating 400- series Sweeper. Compact, manoeuvrable, Operator friendly and now also Electric.



GM500ze

The 500ze is the world's first fully electric sweeper, delivering long-lasting performance with advanced Li-ion batteries. Compact, swift, and eco-friendly, it features a superb ergonomic design and is one of the most popular zero-emission sweepers worldwide.



GM500H2

The world's first-ever hydrogen fuel cell sweeper. It runs 100% on hydrogen with zero emissions, while providing the same comfort and cleaning efficiency the 500ze offers. It comes in two types: with replaceable H2 pods or with a fixed hydrogen tank system.



GM636HS

Our dependable, hard working front line sweeper will remove debris from all surfaces and efficiently, it has a 1.96 cu yd capacity, designed for maximum performance and minimum waste volume. With its sophisticated design details and ability to considerably reduce water consumption, the 636 cuts labor and maintenance costs.



GM720ze

Engineered for efficiency and versatility, with a 2.62 cu yd hopper and 4-wheel steering for excellent maneuverability.
Its advanced design maximizes debris collection - ideal for demanding tasks.



GM955

The 955 is a 7.85 cu yd mechanical sweeper supported by vacuum. The powerful sweeping mechanism is able to collect even the largest debris, the powerful Vacuum will remove the smallest dust particles with the 955 you have the best of two worlds.

GM720ze

Drive with Ease
Fully Electric, Zero Emissions
Lightweight and Compact Design
Extended Battery Life
Ultra-Quiet Operation
High-Performance Sweeping and Filtration
Cost-Efficient Ownership







Clean smarter. Clean greener. Clean with the Green Machines 720ze.

720ze Technical Specifications

Machine Dimension

Width over Body	4 ft 3.2 in
Max Length (including brushes)	14 ft 0.5 in
Max Height (excluding folding beacon)	6 ft 6.7 in
Wheel Base	5 ft 7.0 in
Max swept width (brushes out)	7 ft 6.6 in
Brush Diameter	2 ft 9.5 in

Turning Circle

Kerb to kerb (Two wheel steering)	10 ft 9.9 in
Wall to wall (Two wheel steering)	13 ft 5.4 in
Kerb to kerb (Four wheel steering)	8 ft 2.6 in
Wall to wall (Four wheel steering)	10 ft 6.0 in

Vehicle Speeds

Forward Transit Mode	20 mph
Forward Sweep Mode	7.5 mph
Four wheel steering	5.0 mph

Vehicle Weights

Max Total Permissible Wht (GVW)	7716 lb

Hooper

Capacity	2.62 cu yd
Max Hopper Dump (Unload) Height	5 ft 0.6 in

Drive System

Drive motor:	Electric motors on each side on rear axle (Two wheel hub motors)
Continuous/Peak power	22.8 hp/885 lb-ft / 46.9 hp/1977 lb-ft
Suspension: Front and rear	Mechanical (spiral spring)

Nozzle & Suction Tube Dimensions

Nozzle Dimensions (inlet):	29.9 in Wide x 3.7 in in High
Tube	7.9 in

Electrical Drive System

Battery Type	Lithium-Ion NMC
Battery Weight	4 x 185.2 lb
Battery Capacity	37.28 mph

Battery Chargers

Types	2x Chargers (on board)
Output power (nominal)	2 x 3,3 kW
Type 2 charging	Yes

Maximum Hill Climb

20%

Hydraulics

Oil Specification:	Hydraulic oil ISO 68 biodigradable
Hydraulic Tank Capacity	4.5 gal

Suction Fan Performance

Suction Fan - max RPM	2400 rpm
Flow	1695 cfm

Tires

Size	225/70 R15c
Max Loading	2469 lb
Tyre Pressure	65.3 psi

Water System

Tank Capacity	58.4 gal

Preasure Washer

Type:
Electro / Hydraulic driven high pressure piston pump

Water Flow	2.91 gpm
Max Water Pressure	2031 psi

Noise

Inside Cab	82 dB (A)

Steering System

Four - wheel steering (4WS) optional

Camera

Color video camera for reversing

A/C Air conditioning

Radio/CD Bluetooth

Central lubrication

Pressure washer

Flexible hose



GM720ze

SWEEPER FEATURES



Easy Operation

With a 2.62 cu yd hopper and a gross weight of just 3.86 short tons (GVW 7,716 lb), the GM720ze can be operated with a standard driver's license in most countries.



Urban Maneuverability

Equipped with advanced electric wheel-hub motors, the GM 720ze delivers exceptional compactness. Its four-wheel steering significantly reduces the turning radius, making it perfect for navigating tight urban environments.



Power and Performance

The GM 720ze easily climbs steep slopes and reaches a top speed of 20 mph. It features a wide sweeping path and a patented Cloud-Maker system for unparalleled dust suppression. Its suction nozzle is hydraulically lifted to handle larger debris effortlessly.



Long Battery Life

Powered by durable lithium-ion batteries in an aluminium casing, the GM720ze operates independently for a full shift-over 8 hours, as certified by the EN15429 standard.



Comfortable Cabin

The ergonomic cabin is designed for maximum operator comfort, efficiency, and visibility.
With two spacious seats, a touchscreen display, and full air conditioning, it ensures a pleasant and productive environment for long shifts.



Global Compatibility

The GM720ze is available in both LHD and RHD configurations, making it ideal for global markets.
Fully integrated with IoT technology, it can be continuously monitored and managed via a dedicated app.



Superior Visibility

A wide windshield and glass floor provide unmatched visibility and precise control, ensuring intuitive operation.
The high-performance pressure washer removes tough dirt with ease, making it ideal for deep cleaning and surface restoration.



Smart Fleet Management

The system offers real-time access to key operational data, including GPS tracking, route history, cleaning functions, speed, battery status, and system performance.
All parameters are visualized via the onboard computer, enabling advanced fleet management, diagnostics, and performance optimization.



Thorough Cleaning

An optional vacuum hose allows thorough cleaning in hard-to-reach areas, adding extra versatility for spotless results in any urban setting.

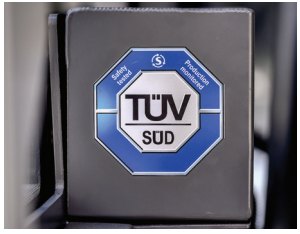

Certified Quality

Certified by TÜV SÜD in Germany, the GM720ze meets all licensing requirements for global distribution.
It reflects Green Machines' commitment to innovation, quality, and sustainability-setting a new standard in urban cleaning.

GM720ze

GREEN MACHINES

With a 2.62 cu yd hopper and a gross weight of just 3.86 short tons (GVW 7,716 lb), the GM720ze can be operated with a standard driver's license in most countries.

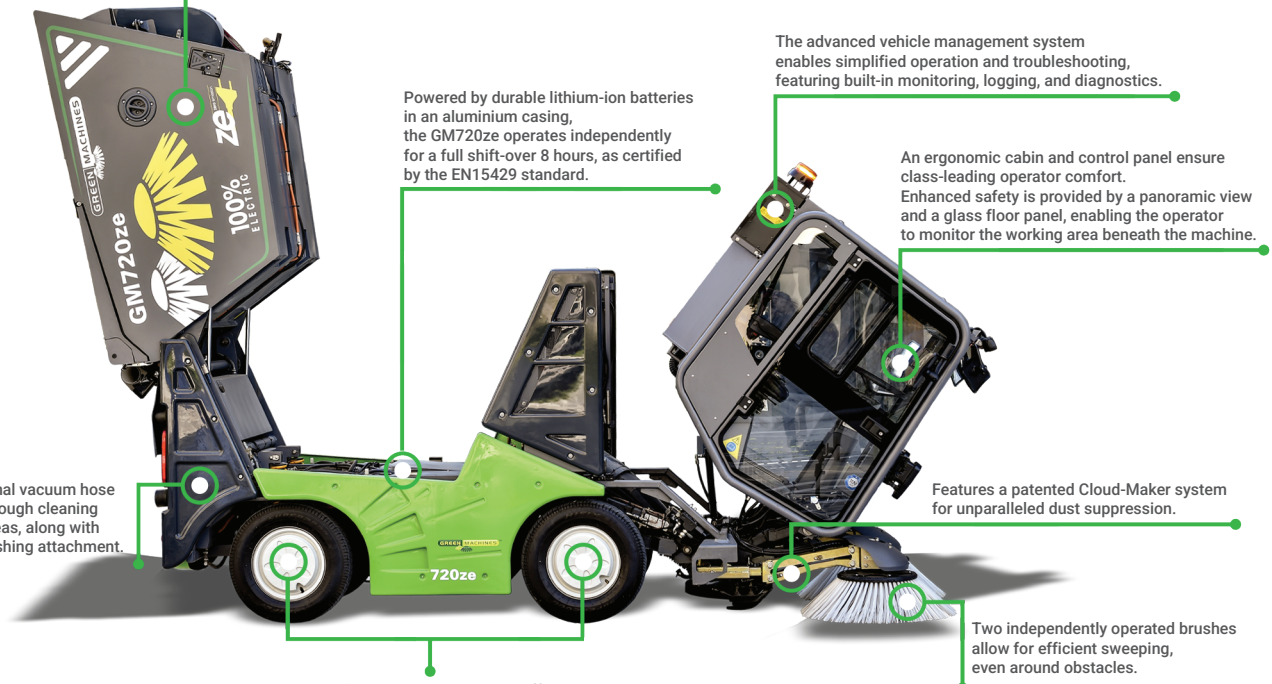

Powered by durable lithium-ion batteries in an aluminium casing, the GM720ze operates independently for a full shift-over 8 hours, as certified by the EN15429 standard.

The advanced vehicle management system enables simplified operation and troubleshooting, featuring built-in monitoring, logging, and diagnostics.

An ergonomic cabin and control panel ensure class-leading operator comfort. Enhanced safety is provided by a panoramic view and a glass floor panel, enabling the operator to monitor the working area beneath the machine.

Includes an additional vacuum hose attachment for thorough cleaning of hard-to-reach areas, along with a high-pressure washing attachment.

Features a patented Cloud-Maker system for unparalleled dust suppression.

Two independently operated brushes allow for efficient sweeping, even around obstacles.

Equipped with advanced electric wheel hub motors, the GM 720ze offers exceptional compactness. Its four-wheel steering dramatically reduces the turning radius, making it ideal for tight urban environments.

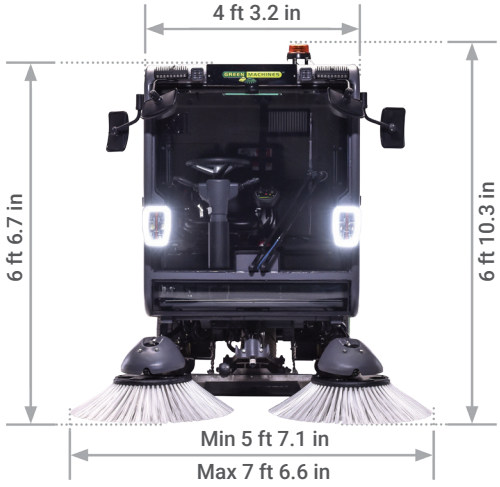
4 ft 3.2 in
6 ft 6.7 in
6 ft 10.3 in
Min 5 ft 7.1 in
Max 7 ft 6.6 in

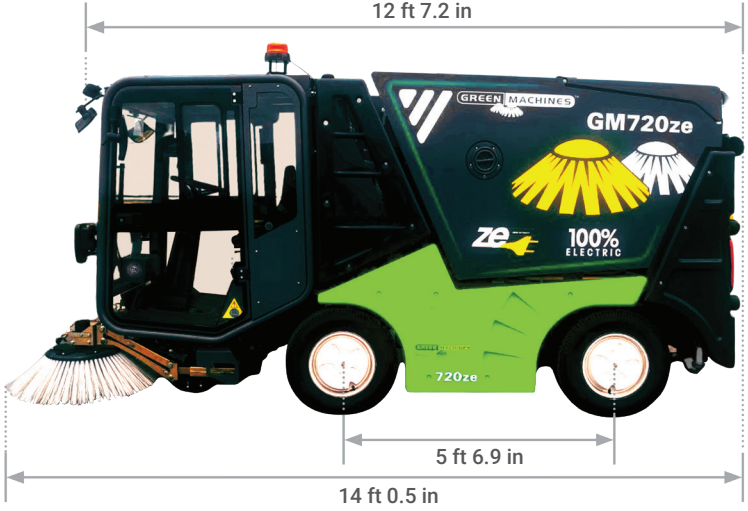
12 ft 7.2 in
GREEN MACHINES
GM720ze
ze
100%
ELECTRIC
720ze
5 ft 6.9 in
14 ft 0.5 in



Green Machines International B.V.
The Netherlands
+389 43 551 100
office@greenmachines.com

Green Machines Veles DOO
North Macedonia
+389 43 551 100
office@greenmachines.com

Green Machines Inc.
5644 Kearny Mesa Rd, Unit B
92111 **San Diego, CA, USA**
T: +1 877 817 0342
T: +1 619 780 6772
F: +1 626 884 5164

GM Sweepers UK Ltd.
United Kingdom
Sales: +44 (0) 1324 611666
Spares: +44(0)1324 578880
sales@greenmachines.com
spares@greenmachines.com